Bath & Shower Faucet

American Standard

FFASTJ54-7T1500BT0

Lift

Lift Exposed Mono Shower

STYLE SEGMENT

- Transitional

KEY SPECIFICATIONS

- Product Description: Lift Exposed Shower Mono
- Bathroom Faucet Type: Contact us for more information
- Colour: Chrome
- Hand Shower Included: Contact us for more information
- Flow Rate: 11.16



SHIPPING WEIGHT

- Net Weight: Contact us for more information
- Gross Weight: Contact us for more information

KEY TECHNOLOGIES AND FEATURES

HYGIENE

- Complies with American Standard Quality Standards

COMFORT

- Complies with American Standard Quality Standards

CONVENIENCE

- Complies with American Standard Quality Standards

DURABILITY

- Complies with American Standard Quality Standards

SUSTAINABILITY

- Complies with American Standard Quality Standards

SAFETY

- Complies with American Standard Quality Standards

OTHERS

- NIL

STANDARDS AND CERTIFICATIONS

- GB 18145-2014

Bath & Shower Faucet

American Standard

FFASTJ54-7T1500BT0

Lift

Lift Exposed Mono Shower

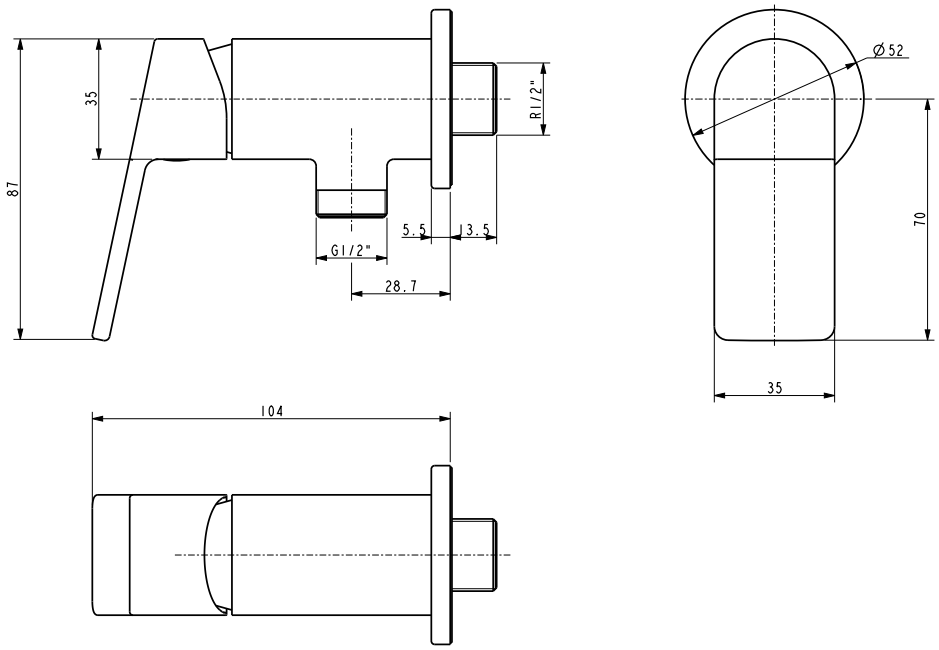

Bath & Shower Faucet

American Standard

FFASTJ54-7T1500BT0

Lift

Lift Exposed Mono Shower

Product	Description	Lift Exposed Shower Mono
	Weight (kg)	0.55
	Dimensions (mm)	Contact us for more information
	Finish	Chrome
	Flow Rate	11.16
	Mounting Location	Wall Mount
Material & Color	Material	Brass
	Color	Chrome
Bathroom Faucet	Type	Contact us for more information
Faucet	Type	Mono
Connection	Size (mm)	DN15
	Size (inches)	G1/2
Handle	Material	Zinc Die Cast
	Type	Lever
	No. of Handles	1

Bath & Shower Faucet

American Standard

FFASTJ54-7T1500BT0

Lift

Lift Exposed Mono Shower

Components	Hand Shower Included	Contact us for more information
	Included	N/A
	Excluded	N/A
Installation	Number of Holes Required	Contact us for more information
Valve	Type	Ceramic